6. THE CONCEPTUAL ECOLOGICAL NETWORK DESIGN MODEL (ENDeM)

6.1. INTRODUCTION

An Ecological Network is a fundamentally spatial concept; undeniably entwined in the environment, which gives it, it's shape. Modelling the environment is one of GIS's strengths. It is this strength that is utilised in this model for the design of Ecological Networks. The effective design of an ecological network is crucial for its functionally and its purpose—to protect the environment in a functional way. It is important that the design follows a process that can be adapted for different areas, scales, approaches and institutional structures. The model that is described here is a first in allowing the area of concern and the input criteria to determine the scale of the ecological network.

Initially the model was species independent. This was not practical as the aim of an ecological network is to protect the environment and the species within that environment. Thus it does not make logical sense to exclude species as a criterion for the design of ecological networks. However, species does not fall into the group of criterion listed as very important in chapter 5.

The model aims at a holistic interdisciplinary approach to the design of Ecological Networks. The results from the model aim to be just that, which is carried through the thesis. The model within this chapter is the culmination of the research. More specifically the system requirements, which form the bases of the model are described here. There after the conceptual Ecological Network Design Model (ENDeM) is described and illustrated by way of conceptual and cartographic models. The equations that form the relationships between the entities are described in full. The chapter is augmented by Appendix 3 where further detail of the input criteria, to the Ecological Network Design Model, is described.

6.2. LISTING SYSTEM REQUIREMENTS

The system requirements, in a nutshell, are to create a model for designing an ecological network. This model has three basic components (sub-models), one for each, of the basic elements (Core Areas, Corridors and Buffer Zones) of an ecological network. The Rehabilitation areas are not included but may be added as an extension to the model if deemed necessary. The three components have all encompassing criteria (listed in table 5.1), their relative weights should be calculated by the method described in the previous chapter. These are used to create a suitability index. Each of the three basic elements of an ecological network has specific criteria, which apply to its form and location.

6.2.1. Core Areas:

- Must support minimum viable population;
- Are ideally located in areas with:
    - High ecological value;
    - No to Low intensity land use;
    - High occurrence of hotspots;
    - High occurrence of Red flagged species and ecosystems;
    - High spatial cohesion;
    - An existing conservation status or a natural area (not absolute).

6.2.2. Corridors:

- Must link Core areas (form is not critical);
- Must avoid or bridge barriers;
- Must follow migratory routes as closely as possible;
- Should be of suitable width (25% of length);
- Should include hotspots not able to be included in core areas
- Are ideally located in areas with:
    - Low to medium intensity land use;
    - Low dispersal (or high density population of species);
    - Along rivers (form natural and are often existing corridors);
- Optimally have high diversity and high connectivity (to core).

6.2.3. Buffer Zones:

- Are adjacent to core areas and corridors
- Separate high intensity land use from core areas and corridors
- Are not areas of:
    - high intensity land use;
    - highly invasive/polluting land use.

6.3. THE ECOLOGICAL NETWORK DESIGN MODEL

The system requirements form the bases of what the model is required to consider in the design of an Ecological Network. The Ecological Network Design Model is described below. Two modelling techniques are used, which follow on from each other. The idea behind these modelling techniques, is to develop the ideal process to design an ecological network at the same time, ensuring repeatability (Van Wyk, 2001).

6.3.1. The Models

Two types of modelling techniques are used here. The first being, conceptual modelling; illustrating the process in a jargon-free manner to facilitate understanding by non-GIS expert.

The second; cartographic modelling, describing the detail of what GIS operations to use to ensure a logical process to follow.

6.3.1.1. Conceptual model

The aim of a conceptual model is to illustrate the stages in the model in a jargon-free manner. This allows the model to be interpreted by persons who are not familiar with GIS. One of the benefits of this method is the fact that it portrays the conceptual procedure of the model simply without being constricted by software specific or GIS jargon.

The basic form of the model is a simple 4 or 5 step process, with 3 sub-models, as illustrated in figure 6.1.

Figure 6.1: The Basic Conceptual Model

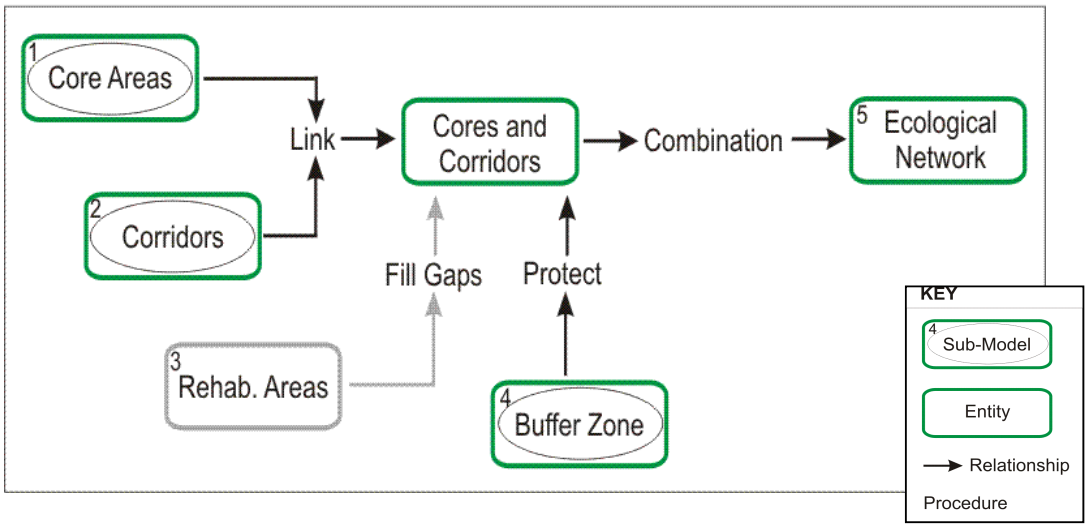

The basic steps are:

1st Step: identifying the core areas (1st sub-model).

The possible core areas are identified according to a set of criteria. The details of this are described in the first sub-model, core areas.

2nd Step: identifying the corridors (2nd sub-model).

Links between core areas are identified as possible corridors. They are defined as described in the second sub-model, corridors.

3rd (optional) Step: identifying necessary rehabilitation zones.

Areas, which do not qualify for core areas or corridors due to their dilapidated state, are selected. With rehabilitation, these areas may qualify for core areas or corridors. These may also be selected to “fill the gaps” in a stepping stone corridor if necessary.

4th Step: selection of buffer areas (3rd sub-model)

Areas are selected with the primary purpose of protecting the core areas and corridors from adverse external factors. This is further described in the third sub-model buffers.

5th Step: forming the network design.

The results of the three sub-models are combined to provide options for the most suitable design of an ecological network.

Only the three basic sub-models are described in detail. The selection of rehabilitation zones is very much site specific. Some areas may be able to be rehabilitated while others cannot be, due to the extent of the pollution and disruption. These sub-models form part of the larger model, without which it is not possible to calculate the core areas, corridors and buffers. The conceptual sub-models are illustrated and discussed below.

6.3.1.1.a. Core Area Conceptual Sub-Model

To be able to select core areas certain criteria have to be met. The way in which these criteria are integrated to allow for the selection of core areas is illustrated in Figure 6.2. There are eight criteria, which affect the selection of core areas. These are Minimum Viable Population, Red Flags, Hotspots, Natural Areas, Ecological value, Land use intensity, the Suitability Index and Spatial Cohesion.

Figure 6.2: The Core Conceptual Sub-Model

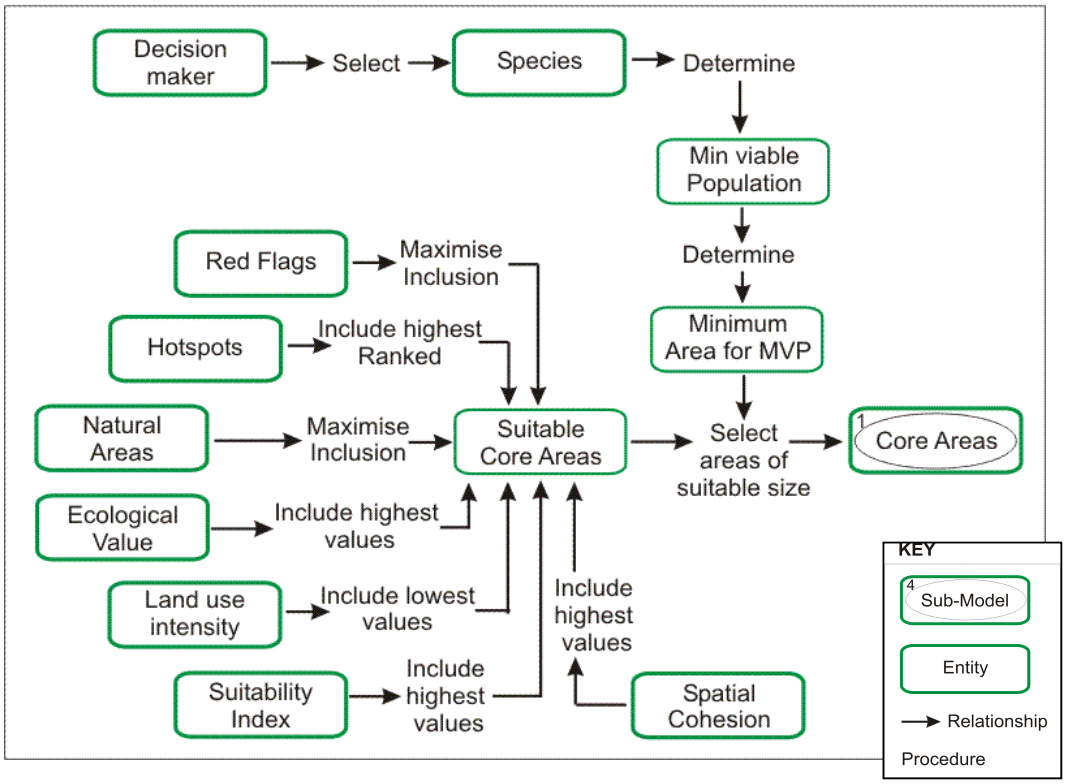

The only criterion that is dependent on the decision maker is the selection of species. These in turn determine the Minimum Viable Population[1] (MVP) and thus the minimum aerial extent of a core area for a particular species. This is quite important, as the minimum aerial extent of

[1] Minimum Viable Population: "a population with a probability of exactly 95% to survive 100 years under the assumption of zero immigration" (van der Sluis *et. al.* 2001)

an elephant (*Loxodonta africana* (Skinner and Smithers, 1990)) is far larger than that of a Striped mouse (*Rhabdomys pumilio* (Skinner and Smithers, 1990)). This process needs to be repeated for all the species deemed crucial for the scale or location of the Ecological Network initiative. Once this has been done for all the relevant species, the largest minimum area for MVP needs to be used to set the minimum size for the core areas in the network. However, two smaller areas with a corridor that allows genetic exchange can be as effective as one big area. This cannot be calculated in the first run of the model. But with user intervention, the minimum suitable area may be reduced to allow this.

The criteria Red Flags is included to ensure the maximum protection for those species, which have been listed as on the verge of extinction or endangered. Similarly, the criteria Hotspots is used to ensure that unique systems, be they ecological, cultural or geological, be encompassed by the core areas. The Natural Areas are those, which already have some kind of conservation status; are non-urban areas or have some kind of natural land use taking place. This criterion is not definitive but increases the suitability of the areas to be designated as core areas. The criteria Ecological Value, is based on a system; to value the ecology of the area concerned. Only those areas of high ecological value are included as core areas. Those areas not included may still be included as corridors or buffer zones. Land use intensity is included to prevent a core area being designated in, for example an industrial area or Central Business District (CBD). The most compressive of the criteria is the suitability Index. This is based on the overall criteria listed in table 5.1. Placing special emphasis on those criteria, which were ranked as most important. This criterion is not listed under the specific system requirements for core areas as it supersedes this by being the underlying criteria for the entire ecological network. Spatial Cohesion indicates how compact the core areas are. This prevents a very long thin core area to be selected, which will most likely function better as a corridor.

6.3.1.1.b. Corridor Conceptual Sub-Model

Just as Core Areas are defined by criteria, so too are the Corridors that link them. Corridors, similar to Core Areas, are based on the underlying criterion, the Suitability Index. To this is added Land Use Intensity, Migratory Routes, Dispersal, Hotspots, Barriers and Rivers as illustrated in figure 6.3.

A Land Use Intensity of low to medium is permissible in a corridor, as its primary functions are migration, commuting and dispersal (Foppen *et al.,* 2000). However these intensities should remain low, as corridors may function as core areas for a larger scale ecological network. From a Corridor's primary functions, it is apparent that corridors should follow migratory routes as closely as possible. Migratory Routes may be of different (time) scales: diurnal migration between feeding areas, and nests; or seasonal migration, across plains, with their function differing accordingly. These migratory routes can help to locate necessary corridors.

Hence the criterion Migratory Routes is included. Similarly the criterion Dispersal is included to ensure that functional corridors are delineated. The Hotspots not included in the Core Areas are included here to afford them some protection. Rivers form natural corridors, often with natural space along their banks, making them a good bases for the design of corridors (van der Sluis and Chardon, 2001; van der Sluis *et. al.* 2001).

Figure 6.3: The Corridor Conceptual sub-Model

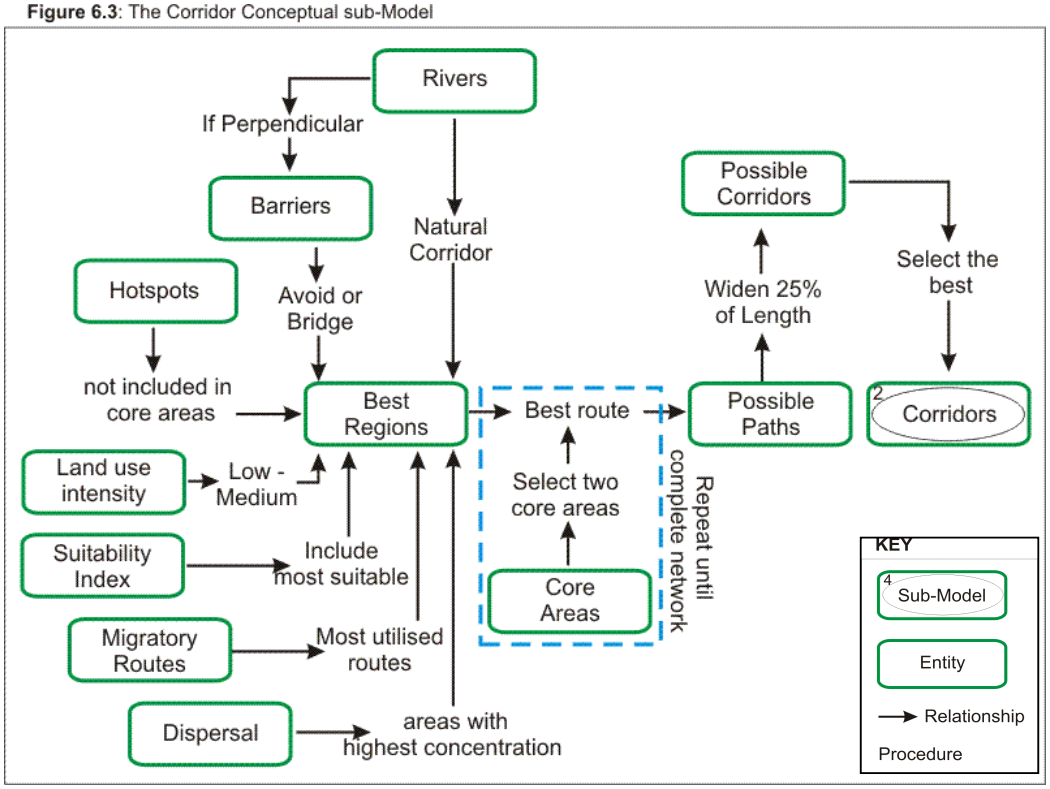

Contrary to this, a river may also form a barrier, depending on its width. If a migration route runs perpendicular to a river or if it is heavily industrialised, it may be a danger or unsurpassable. Most man-made features are barriers to differing degrees. These inhibit or prevent the functioning of the corridor, thus they are avoided in corridor design. If this is not possible then a means to “bridge” the barrier is sort.

Optimally a corridor should have a relatively high diversity (depending on type (see chapter2)) and a high connectivity to core areas. Once this has been determined, the aerial extent needs to be determined. The length of a corridor is typically from Core Area to Core Area. This may either be continuous or broken (see figure 2.2 depending on type). Broken corridors may form ‘nested’ ecological networks within breaks. A stepping stone in a stepping stone corridors may function as a core area for another ecological network. The width of the corridor is a debateable issue, as none of the respondents agreed, this discrepancy was paralleled in the literature. The width of a corridor is dynamic in nature. As such its width should be dynamically allocated. It is assumed that an optimal width is related to the length of the

corridor. Thus, for example, the corridor width can be calculated as 25% of the corridor's length. This is used in the model. To protect this a Buffer zone is added.

6.3.1.1.c. Buffer Zone Conceptual Sub-Model

Buffer Zones protect the core areas and corridors from the adverse effects of high intensity land use. From this it is apparent that the primary criteria for Buffer Zones are adjacency to core areas and corridors, land use intensity, land use and suitability. The combination of these criteria is illustrated in figure 6.4.

Figure 6.4: The Buffer Conceptual Sub-Model

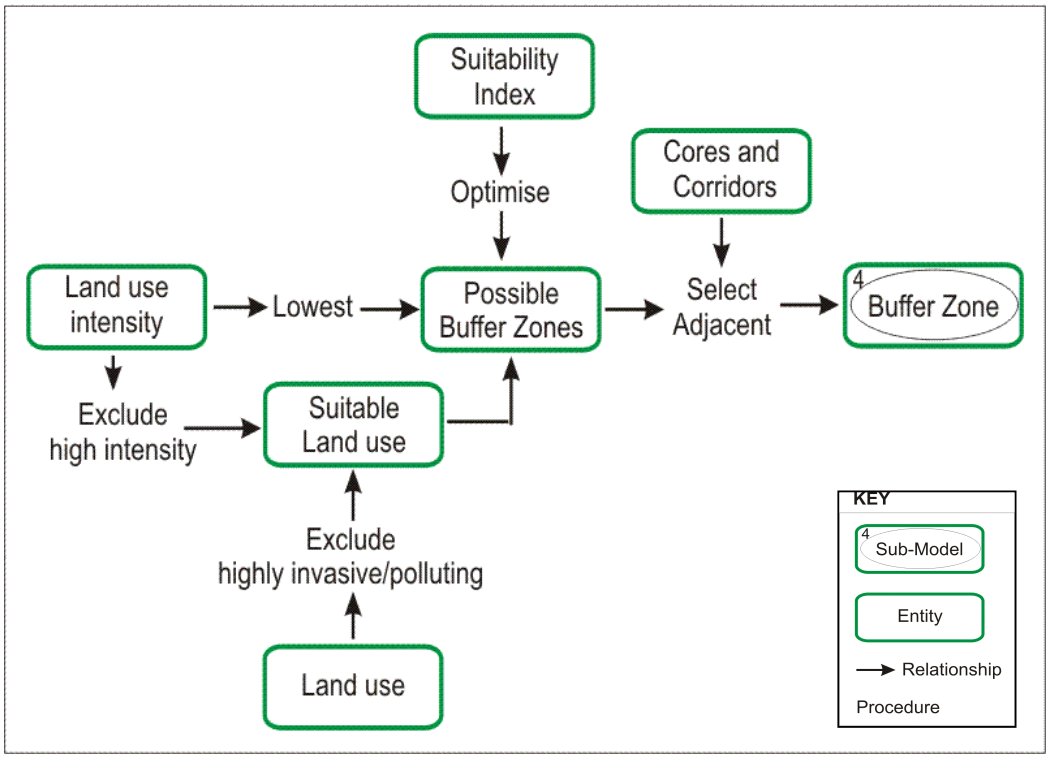

High intensity land use and highly invasive / polluting land use cannot occur within a buffer zone if it is to protect the core areas and corridors from just such effects. Hence these are explicitly excluded from the possible buffer zones. The Land use intensity is kept as low as possible. Bearing in mind that the areas of lowest and low to medium land use intensity, are included in the core areas and corridors respectively. However excluding highly invasive or polluting land uses (as defined in Appendix 4) is very important. Similarly the Suitability Index is optimised (i.e. the most suitable available[2] areas are selected). From the possible buffer zone regions, adjacency to core areas and corridors, as the determining criteria, has the most affect as to where the buffer zones will be located.

[2] Those regions not already occupied by the core area and corridors.

Delineating the buffer zones is the final step before combining the three sub-models into and ecological network.

The conceptual model explains the process behind the model. For the model to be build and function properly, the more technical aspects of the spatial and attribute data, the GIS operations and their order need to be described. A classic method to do this is to make use of Cartographic Modelling, by drawing up a Cartographic Model.

6.3.1.2 Cartographic Model

A cartographic model illustrates how the results are obtained and ensures repeatability of the process. The purpose of this model is to give a clear, logical, progressive analysis of the problem solving process (Van Wyk, 2000). In essence this is the conceptual prototype for the model.

As with the Conceptual Model, the Cartographic model has 3 sub-models, *Core Areas*, *Corridors* and *Buffer Zones*. The integration of these is illustrated in figure 6.5 *The Basic Cartographic Model.* The selection of Rehabilitation Areas is excluded from this model as it is highly site specific and does not form a crucial part of the design of an Ecological Network.

Figure 6.5: The Basic Cartographic Model

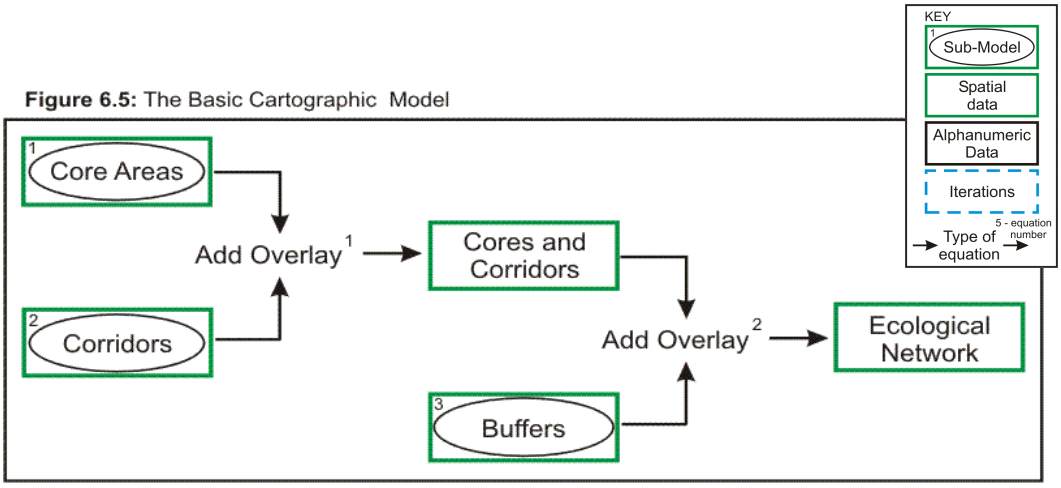

The results from the *Core Areas Sub-Model* (see fig 6.6) are overlaid using an additive process with the results from the *Corridors Sub-Model* (see fig. 6.7). The results are a surface including both Cores Areas and Corridors. This is in turn overlaid with the results from the *Buffer Zone Sub-Model* (see fig 6.8), to produce the proposed design for the Ecological Network. This needs to be considered by the decision makers to decide if this network should be implemented or if alterations to the model or variables are necessary, for optimisation.

6.3.1.2.a. The Core Areas Sub-Model

In brief the suitability of the region is calculated through multi criteria analysis. The spatial cohesion of these results are calculated. Parallel to this, the minimum area required, to sustain a minimum viable population is calculated, for all the species deemed necessary. From this the maximum aerial extent is selected. The areas that are most suitable, most cohesive and are larger than the largest minimum area, are selected for core areas as illustrated in figure 6.6.

Figure 6.6: The Core Cartographic Sub-Model

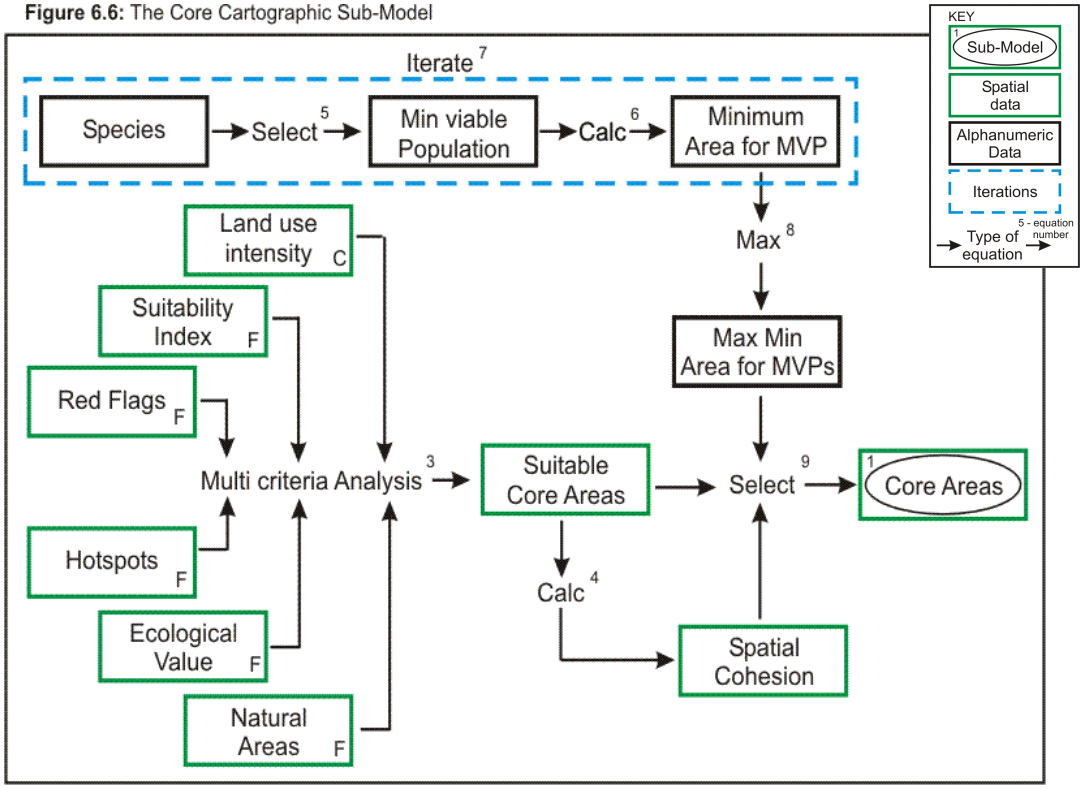

Explanation of Equations:

3. Multi Criteria Analysis (MCA)[3]

w = principal eigenvector of a pairwise reciprocal comparison matrix

$lw_l + sw_s + rw_r + hw_h + ew_e + nw_n = Sca$

where:

w = best fit weights $\sum(w_{1\text{-}6}) = 1$

l = land use intensity

s = suitability index

r = Red Flags

[3] A set of best-fit weights are calculated using the principal eigenvector of a pairwise reciprocal comparison matrix in which each of the six criterion in the multi-criteria evaluation is compared to every other criterion (Eastman 2001). Weights derived in this manner sum to one (Malczewski 1999). These are included in the MCA, which is calculated by means of Weighted Linear Combination (WLC) of criteria. Using WLC, each standardised criteria is multiplied by its weight, then the results are summed (Eastman 2001). Note: The input criteria to the MCA are mostly in the form of standardised fuzzy membership functions (see sec. 5.3.1.1a Fuzzy Numbers).

h = hotspots

e = ecological value

n = natural areas

Sca = Suitable Core Areas

The input criteria (l; s; r; h; e; n) to the MCA are in the form of standardised fuzzy membership functions.

4. Calc

The connectivity as a measure of spatial cohesion is calculated for each grid cell. For a full explanation see van der Sluis *et. al.* (2001 pg 26).

5. Select

A simple attribute query, to determine what the minimum viable population is for a particular species.

6. Calc

Calculate the minimum aerial extent required to support a minimum viable population of a particular species.

7. Iterate

Repeat this process for all the species selected by the decision maker.

8. Max

Select from the results of each iteration (Eq. 7), the highest value.

9. Select

Include all areas

WHERE Suitability tends to maximum

AND Spatial Cohesion tends maximum

AND Area is greater than minimum (results of max (Eq. 8))

6.3.1.2.b. Corridors Sub-Model

In brief, a least cost surface is created using MCA, with both constraints and factors considered according to their best-fit weight. A selection of a number of combinations of core areas are made. For each of these combinations of Core Areas a least cost path is calculated. After each iteration the path is added to the *Possible Paths* spatial data set. Each of these proposed paths are widened, for example by 25% of their length, in proportion to form possible corridors. The width does not have to be constant along the length of the corridor. These corridors are ranked according to their diversity and connectivity. From these

the most suitable corridors are selected for the Ecological Network. This process is illustrated in figure 6.7.

Figure 6.7: The Corridor Cartographic Sub-Model

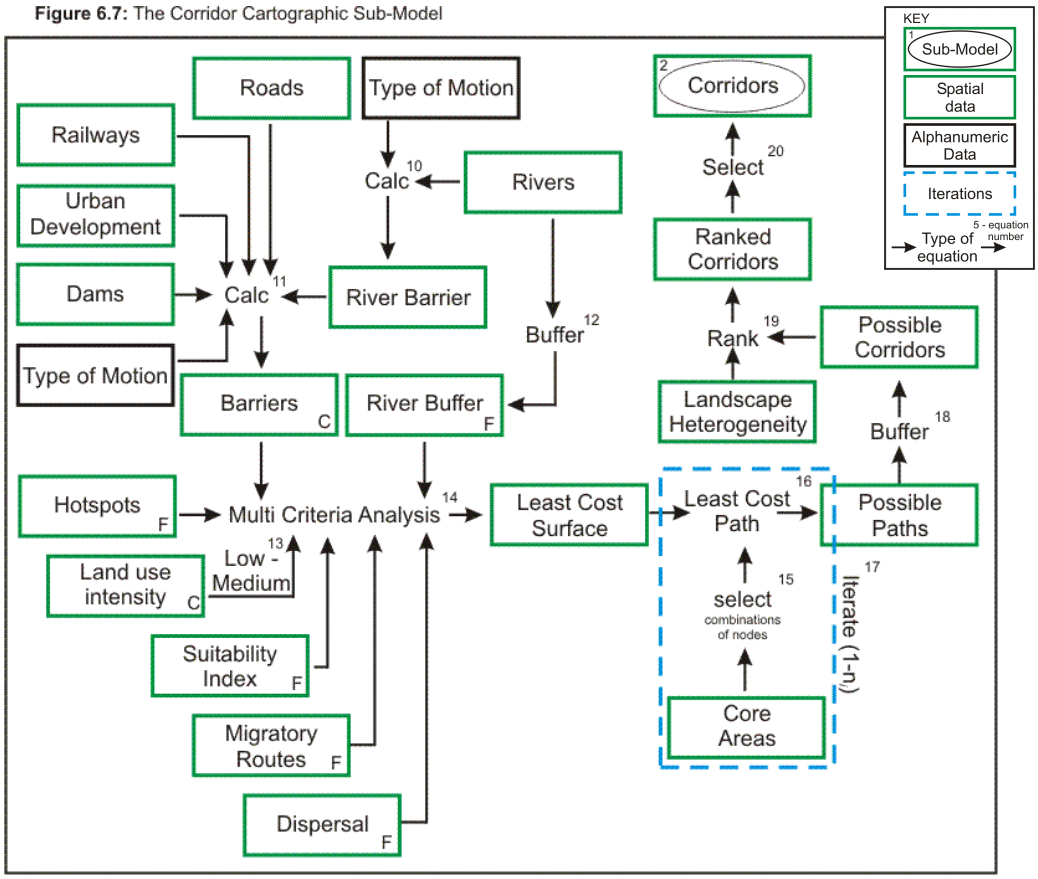

Explanation of Equations:

10. Calc [4]

IF 190 < a > 170 OR 10 < a > -10

THEN p = 0

ELSE IF m = “Walk”

THEN p = 1 – (s / w)

ELSE p = 0

Where:

a = direction of approach compared to river

p = permeability of the river barrier (1 impermeable, 0 fully permeable)

m = type of motion {“Fly”; “Swim”; “Swim/Walk”; “Walk”}

s = size of species

w = width of river

[4] if approach is not parallel to the flow of the river. The river is a semi permeable barrier. Permeability is dependent on width, size of species, and type of motion.

11. Calc (logic)

dm OR um OR wm OR rm OR p = b

sub

	Type of Motion			
	Flight	Swim	Swim/ Walk	Walk
Dams	0	0	0	1
Urban Development	0	1	1	1
Railways	0	1	1	1
Roads	0	1	1	1

where:

d = Dams

u = Urban Development

w = Railways

r = Roads

p = permeability of river barrier, (results of equation 10)

m = type of motion {“Fly”; “Swim”; “Swim/Walk”; “Walk”}

b = Barriers (1 impermeable, 0 fully permeable)

12. Buffer

$(a + b + c)/3 = r$

where:

a = River network

b = buffer area of 50 m

c = buffer area of 100m

r = area ideal for riverine corridor (river buffer). {0;1}

13. Low – Medium

select areas where intensity is between Low and Medium.

14. Multi Criteria Analysis[5]

w = principal eigenvector of a pairwise reciprocal comparison matrix

$rw_r + dw_d + mw_m + sw_s + lw_l + hw_h - bw_b = Cs$

[5] The same principal is used here as in the Core Area Cartographic Sub-Model (See footnote 3 of this chapter).

where:

w = best fit weights $\sum(w_{1\text{-}6}) = 1$

r = river buffer {0;1}

d = dispersal

m = migratory routes

s = suitability index

l = land use intensity

h = hotspots

b = Barriers

Cs = Least Cost surface

The input criteria (d; m; s; l; h) to the MCA are in the form of standardised fuzzy membership functions (fig. 5.3).

15. Select combinations of nodes

for $c_{1\text{-}j}$: minimise d = n_i

where:

c = Core Centre

j = number of Core Areas

d = distance between $c_{1\text{-}j}$

n = a combination of nodes / core centres

i = number of combinations of nodes / core centres $\binom{j}{i}$

16. Least Cost Path

Calculate the least cost path between the a combination of nodes (n_i)

17. Iterate (1 - n_i)

Repeat procedure until all possible combinations of nodes (n) have been allocated a least cost path.

18. Buffer

p + b (l x 0.25) = c

where:

p = Possible paths for a corridor

b = buffer

(l x 0.25) = buffer distance (0.25 = proposed distance)

l = length of the possible path

c = possible corridors

19. Rank.

$(d + e)/2 = r$

where

d = Landscape heterogeneity (0;1)

e = ease of movement (0;1)

r = rank (0;1)

20. Select: Optimised network of a Minimum Spanning Tree network

Adapted Minimum Spanning Tree problem:

$\min \sum_i \sum_j (1-r_{ij})\, d_{ij}\, \lambda_{ij}$

sub

$\lambda_{ij} = \lambda_{ji}, \forall i, \forall j$;

$p_{ij} = 1$;

where

r_{ij} = is the rank of the possible corridor between core areas i and j;

d_{ij} = is the distance of the best suitable route between core centres i and j;

λ_{ij} = is a binary variable, assuming values 0 and 1 and

p_{ij} = is the existence of a possible route between core centres i and j.

The minimum spanning tree problem, can be solved fairly simply, by using a Greedy Algorithm (Kruskal, 1956 *cited in* Rietveld and Bruinsma 1998). For an explanation of this see Rietveld and Bruinsma (1998).

6.3.1.2.c. Buffer Zone Sub-Model

In Brief all the non-suitable land use and high intensity land use are combined into an unsuitable land use surface. This surface is in binary form. These unsuitable areas are removed from the suitable areas by means of a multiplication overlay resulting in the regions for possible buffer zones. This is to ensure that no unsuitable areas will be included as buffer zones. The last step of this sub-model is to select those areas, which are adjacent to the Core Areas and Corridors to be Buffer Zones. This process is illustrated in figure 6.8.

Explanation of the Equations:

21. Calc

min l AND max s = sa

where

l = Land use intensity

s = Suitability index

sa = Suitable Areas

Figure 6.8: The Buffer Zone Conceptual Sub-Model

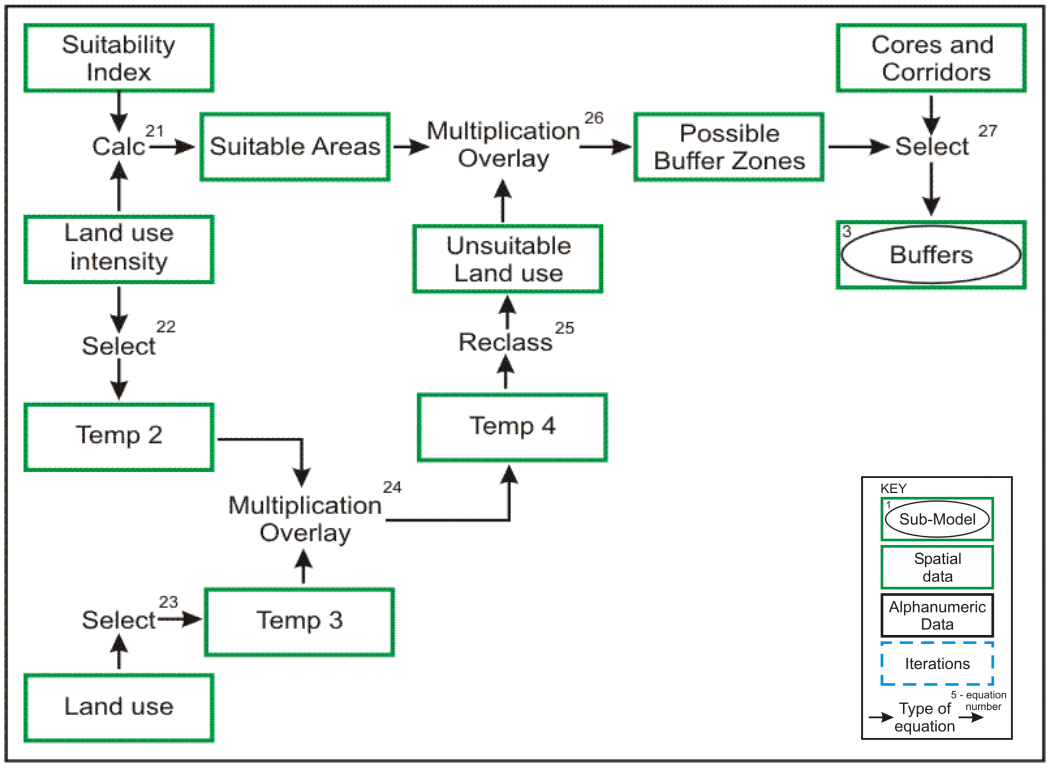

22. Select

    all areas

    WHERE intensity = high

23. Select

    select all areas which are deemed as invasive land use type.

    all areas

    WHERE type = “commercial”

    AND type = “industrial”

    AND type = “mining”

24. Multiplication Overlay

    $t_2 \times t_3 = t_4$

    where

    t_2 = areas of high intensity land use

    t_3 = areas if invasive and high polluting land use

    t_4 = combination of unsuitable land use in terms of both intensity and type.

25. Reclass

Reclassify temp 4 into binary form

where

0 = unsuitable land use

1 = suitable land use

26. Multiplication Overlay

u x s = b

where

u = unsuitable land use {0;1}

s = suitable land use (fuzzy membership function)

p = areas with potential to be Buffer Zones

27. Select

areas from p adjacent to c = b

where

p = possible Buffer Zones

c = cores and corridors

b = Buffer Zones

6.3.1.3. Assumptions:

It is assumed that the data can be obtained.

It is assumed that the data is available or can be converted to the correct format

It is assumed that the data is on the same datum and projection relevant to the area under consideration.

NOTE: these are models based on the ideal and NOT on available data.

6.3.1.4. The Input Criteria

Any model requires data as input variables. This data may be spatial or alphanumeric from many different sources. This data needs to be defined, and in some cases manipulated to conform to the requirements of the model. These input variables and some suggested processes for manipulation are defined in Appendix 3.

6.3.1.5. Scale

The scale of the Ecological Network is largely determined by the input criteria. More specifically, by the size of the region under consideration, which indirectly determines the species and ecosystems involved. This also determines the capture scale required in the

data. The resolution of the data used in the model, determines how much detail can be included in the design. It also determines the size of the basic elements of the Ecological Network. If the resolution is 1km by 1km then the core areas cannot be designed less than 1 km^2 due to a lack of more detailed data. Hence data plays an important role in the model, which is why the model was designed for the ideal and not for the data. Data can be obtained or created, at a cost (both monetary and time related) but the better the input to the model the better the results.

6.4. SUMMARY

The design of an Ecological Network has four main considerations. The first consideration is that of the general all encompassing criteria, which affect the whole network. The second being the selection of core areas, which conform to both the general and specific criteria which affect the core areas only. The third consideration is the selection of corridors in such a manner to ensure the optimisation of the network. And lastly the selection of buffers which will protect the network from negative external influences. The system requirements and the model reflect this in their structures.

The system requirements, detail the general and the specifics on which to base the model. These were derived from the definition of ecological networks (chapter 2), the initiatives described in chapter 4, and the expert knowledge base in a series of digital interviews (chapter 5). Each of the three basic elements of an ecological network has specific criteria, which apply to its form and location, these were also derived from the above stated chapters. From the system requirements it became clear that it is not possible to create a species exclusive model for the design of Ecological Networks.

The model is based on the system requirements. Thus it is split into three sub-models, one for each of the basic elements, which constitute an Ecological Network. The general criteria are incorporated in the sub-models as the suitability index and land use intensity criteria. The three sub-models are described in the form of both a conceptual model for the layperson and a cartographic model for the GIS specialist. The calculations are detailed for the cartographic model according to 'standard'[6] GIS operations. Since many spatial data standards, including the feature catalogue (Cooper, *Pers. Comm.,* 2003), are still in the development process. The input criteria are defined and specified in Appendix 3. Many of the input criteria for the sub-models are not readily available and require manipulation and calculations, to be applied to the original data, before they can be entered into the model or sub-models. These calculations are also been specified in Appendix 3. The results from these sub-models are combined to form a series of spatial design proposals for an Ecological Network.

[6] Standards in GIS are still in a state of flux, within this thesis the operations and terminology are kept as close to those most commonly used as possible.